TECHNICAL SPECIFICATIONS

Call 01255 555200
Email info@durite.co.uk
Visit www.durite.co.uk

0-445-50 - Dual Colour Beacon with Single Bolt Base and Seat Belt Kit

Durite LED Dual Colour Amber Green Warning Beacon with Single Bolt Base and Seat Belt Kit. Voltage:10-30V. 3 Flash Patterns: Single flash, Dual flash and Rotating. 20W Max, 24 SMD 3535 LEDs. IP66. UKCA CE, E Marked R10 EMC, ECE R16 Seat Belt.

Beacon	Seatbelt
RED = Amber LED	RED = N/A Do not connect
YELLOW = Green LED	BLACK = Connect to Ground -VE
BLACK = Ground -VE	WHITE - Connect to Yellow on Beacon (0V Trigger)

Operation Note: to change flash pattern remove the lens. Press the button for 1 second for the next flashing pattern.

Call 01255 555200
Email info@durite.co.uk
Visit www.durite.co.uk

TECHNICAL SPECIFICATIONS

Type	Dual Colour Beacon Amber / Green + Seat Belt
Voltage	10-30VDC
LED's	12PCS Green, 12PCS Amber, 3W SMD3535 LED's
Power	20W Single / Dual Flash. 8W Rotating
Current Draw	0.97A Rotating, 1.59A Single, 1.58A Double at 12VDC
Flash Patterns	Single flash, Double flash and Rotating
IP Rating	IP66
Material Construction	PC Lens, ABS Base
Weight	0.500Kg Beacon. 0.645Kg Belt and Clip.
Dimensions	Please see below
Operating Temperature	-30°C to +50°C
Storage Temperature	-30°C to +50°C
Certificate	UKCA, CE, E Mark R10 EMC, ECE R16 Seat Belt

TECHNICAL DRAWING

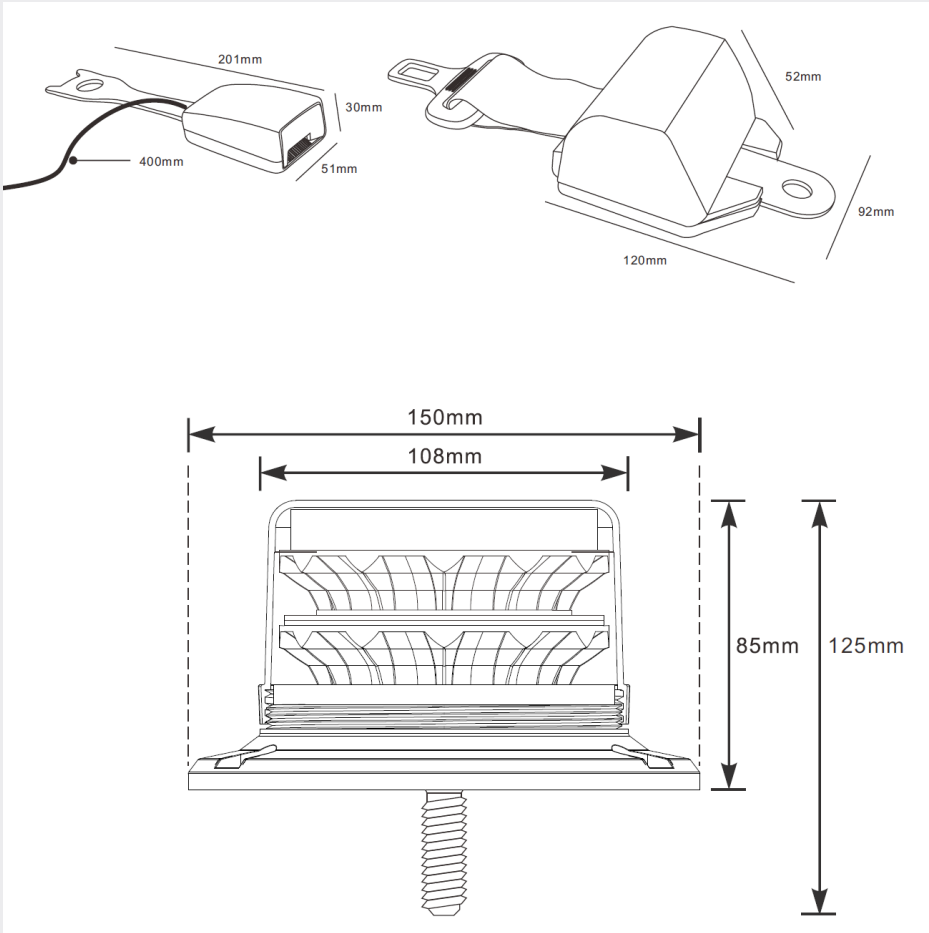

The information contained in this document is correct to the best of our knowledge and subject to change at any time without notice.